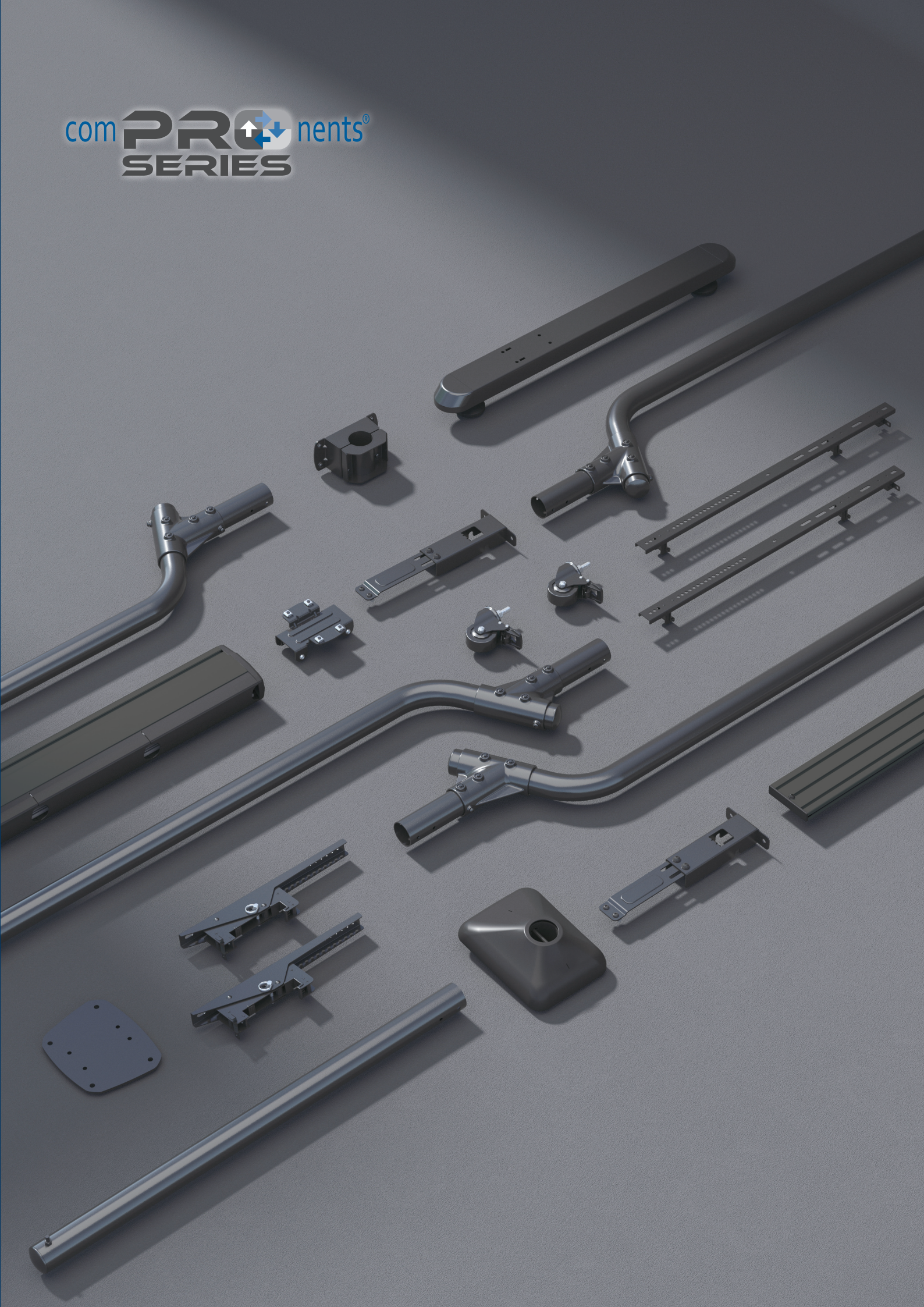
comPRO nents®
SERIES

comPROnents® SERIES

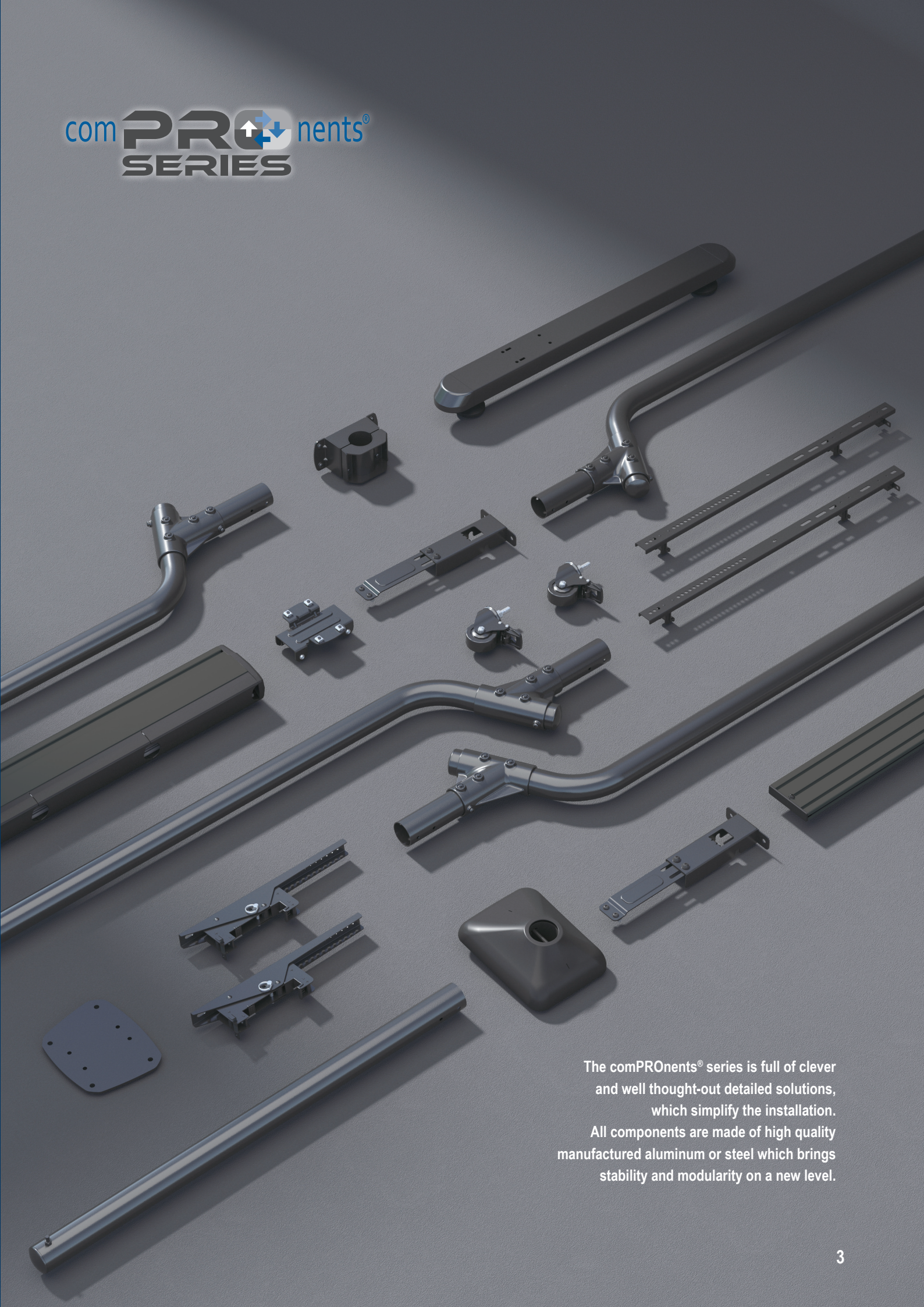

The comPROnents® series is full of clever and well thought-out detailed solutions, which simplify the installation. All components are made of high quality manufactured aluminum or steel which brings stability and modularity on a new level.

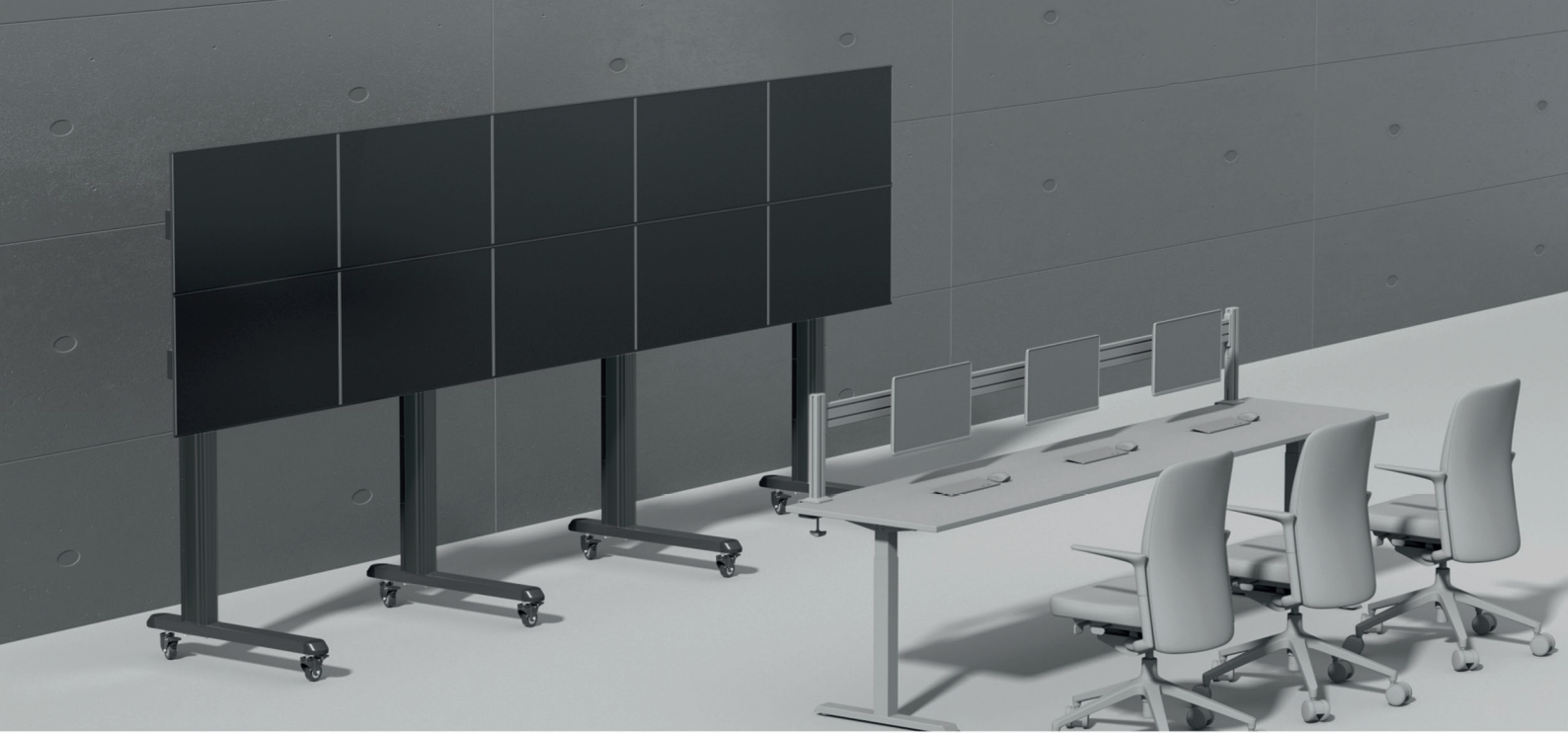

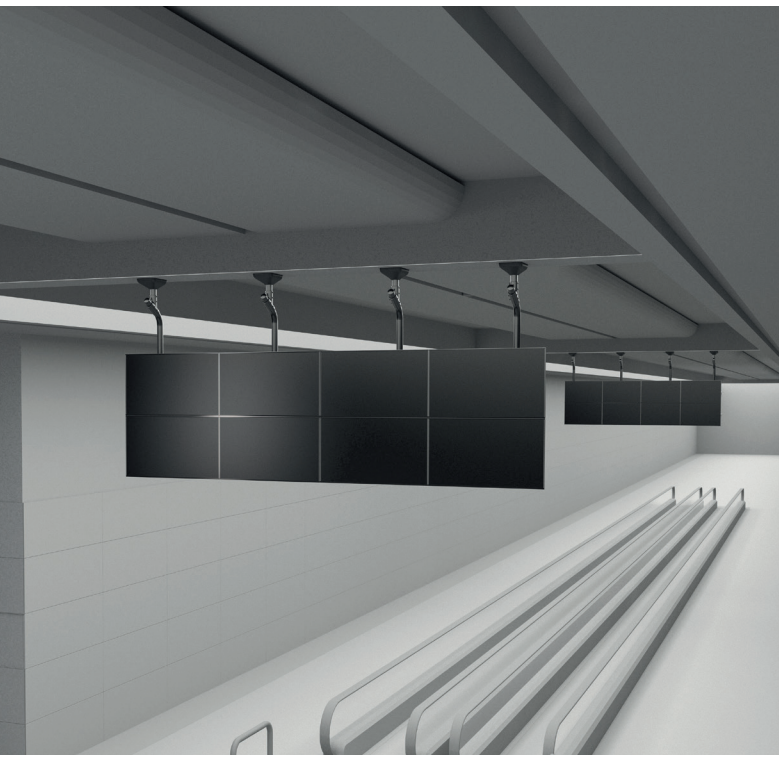

THE MODULAR SOLUTION
for digital signage

Modular solutions save time and money by offering designers and installers the ultimate in versatility.

HAGOR Products offers components that can be configured as ceiling mounts, stand systems or wall solutions.

The comPROnents® series offers endless possibilities for a wide range of applications - including retail, broadcast, education, transportation, and more!

With the comPROnents® series, HAGOR has created a smart solution to generate almost any desired configuration for screens and LED solutions with just a few modular components.

All components are made of high-quality aluminum or steel and are designed in a way that everything fits together perfectly and your installations can be carried out as quickly as possible.

Discover solutions for wall, ceiling or floor mounting, for example, that can be easily combined in order to be able to generate individual installation options, such as menu boards or video wall situations, with great flexibility.

With the comPROnents® series, in connection with your digital signage content, you can create optical highlights that immediately become an eye-catcher for every target group.

With the "WOW-Effect" you will attract attention to new products, promotional content or important information.

Put together your own individual solution and get started right away. Thanks to the effortless assembly technology, your spectacular digital signage content will become the highlight you deserve, on a low budget.

Our goal is to consistently improve and develop digital signage products that increase installation flexibility and at the same time increase sales and profits for our customers.

AV-Mounting? We take care!

Telephone: +49 (0) 57 31 - 7 55 07-0

Email: compronents@hagor.de

MODULAR SETUP - UNLIMITED POSSIBILITIES

- ✓ Wall mounts single
- ✓ Wall mounts multiple
- ✓ Ceiling mounts single
- ✓ Ceiling mounts multiple
- ✓ Menu board mounts wall
- ✓ Menu board mounts ceiling
- ✓ Floor-to-Ceiling mounts single
- ✓ Floor-to-Ceiling mounts multiple
- ✓ Floor-to-Wall mounts
- ✓ Video wall mounts wall
- ✓ Video wall mounts ceiling
- ✓ Video wall mounts stand systems
- ✓ Stand systems free standing - single
- ✓ Stand systems free standing - multiple
- ✓ Stand systems mobile - single
- ✓ Stand systems mobile - multiple
- ✓ LED mounts wall
- ✓ LED mounts ceiling
- ✓ LED mounts floor-to-wall
- ✓ LED mounts free standing

Installation example:
Menu board ceiling mount
4x1 portrait

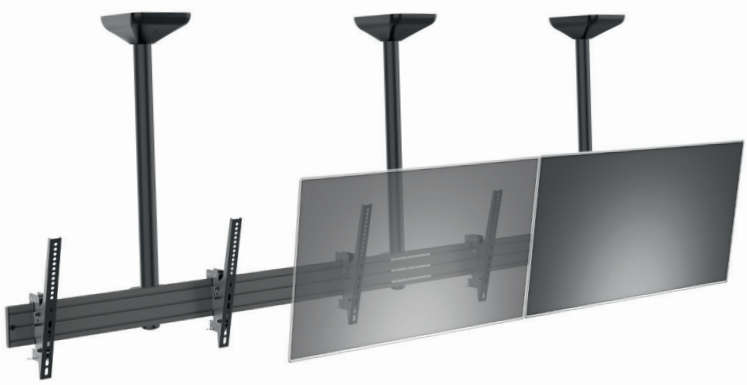

Installation example:
Menu board ceiling mount
3x1 landscape

comPROnents® Series
Modular setup - unlimited possibilities

The following scheme gives an overview of the components required for a ceiling installation.

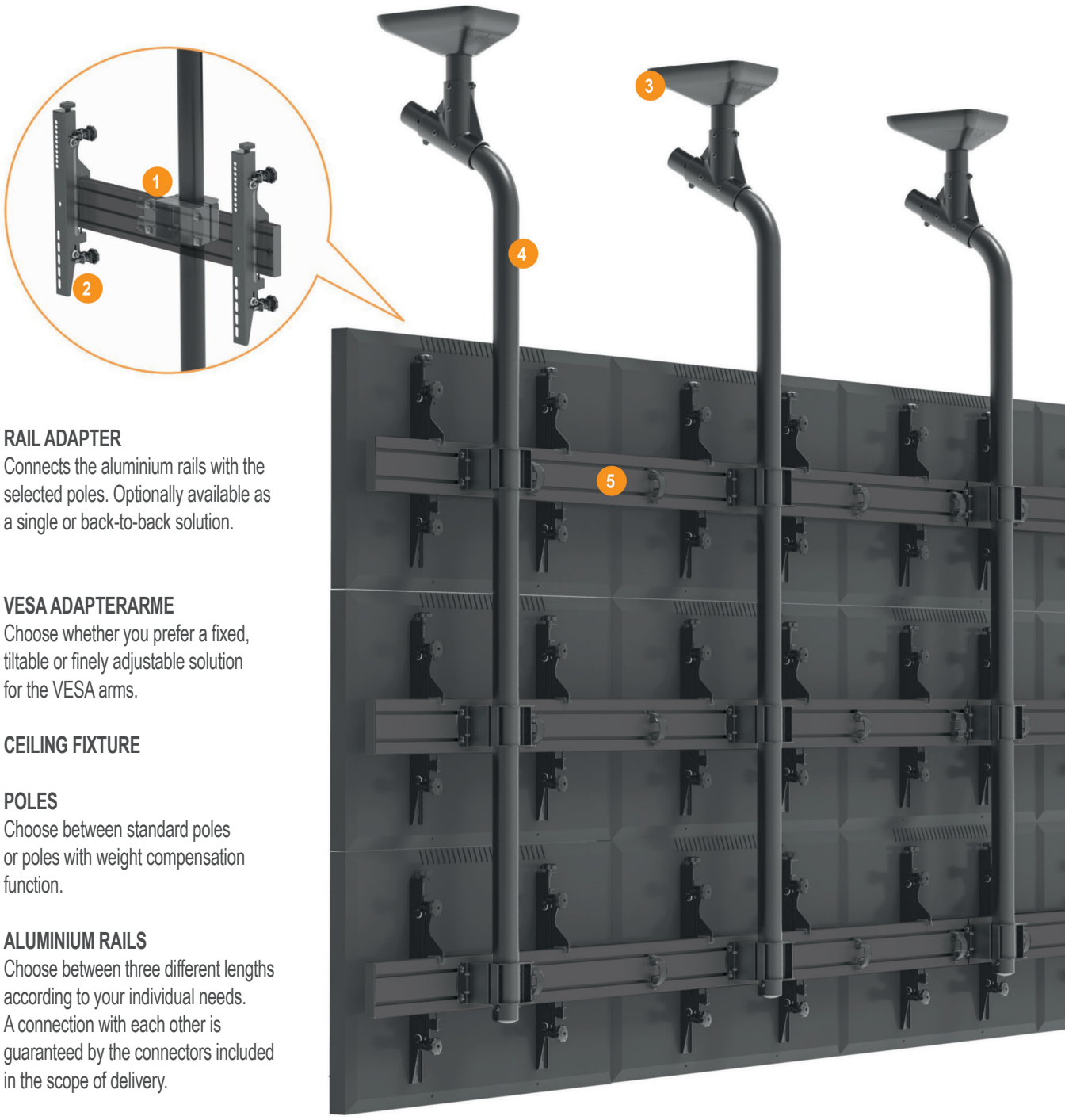

1 **RAIL ADAPTER**
Connects the aluminium rails with the selected poles. Optionally available as a single or back-to-back solution.

2 **VESA ADAPTERARME**
Choose whether you prefer a fixed, tiltable or finely adjustable solution for the VESA arms.

3 **CEILING FIXTURE**

4 **POLES**
Choose between standard poles or poles with weight compensation function.

5 **ALUMINIUM RAILS**
Choose between three different lengths according to your individual needs. A connection with each other is guaranteed by the connectors included in the scope of delivery.

POLES

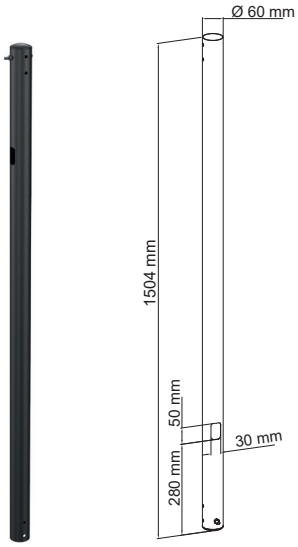

CPS - POLE 1500 mm
Ø 60 mm
Item no.: 3214

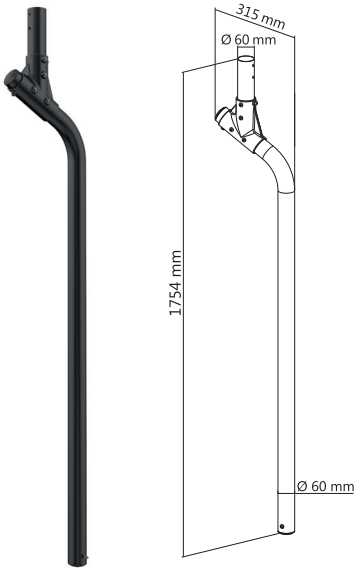

CPS - POLE 1750 mm
FOR MULTISCREEN INSTALLATION
Item no.: 3215

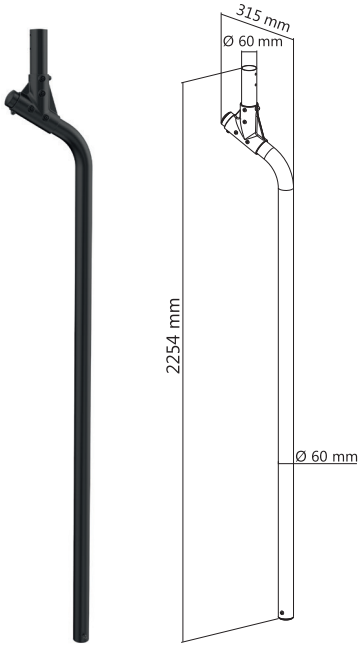

CPS - POLE 2250 mm
FOR MULTISCREEN INSTALLATION
Item no.: 3216

INFO

Specific & Professional

The HAGOR comPROnents® series offers the right components for almost every application. No matter if it is a single or dual application or a video wall - the individual parts can be optimally combined to create the required assembly solution.

Creating multi-screen solutions with straight poles on top of each other (as is often offered in the market) can lead to security problems as the solutions tilt over time, resulting in misalignment of the information displayed.

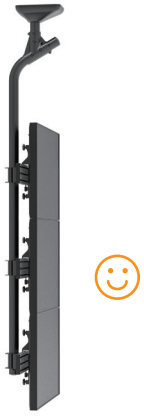

Using poles with a weight compensation function ensures long-term alignment and safety of the system.

Straight poles are ideal for a single row of displays.

RAILS

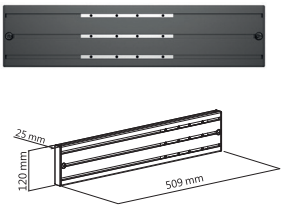

CPS - ALU RAIL 500 mm
Item no.: 3210

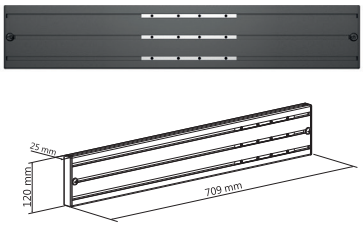

CPS - ALU RAIL 700 mm
Item no.: 3211

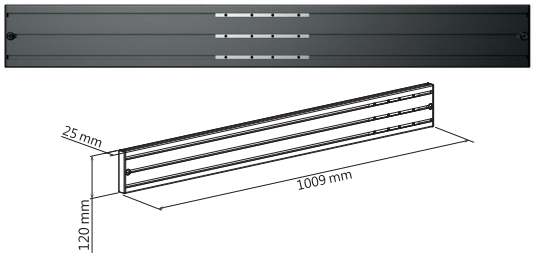

CPS - ALU RAIL 1000 mm
Item no.: 3212

INFO

Connection of the aluminium rails

The aluminum rail connectors included in the scope of delivery create endless configurations for almost any environment. The stability among each other remains completely intact and does not affect the load capacity or safety in any way.

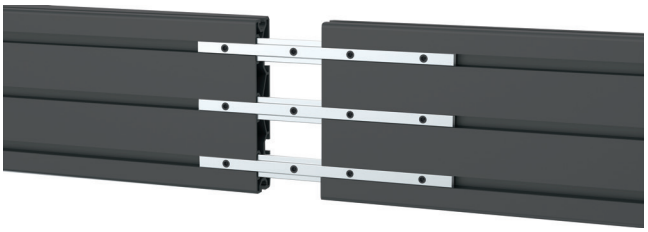

CEILING PLATE

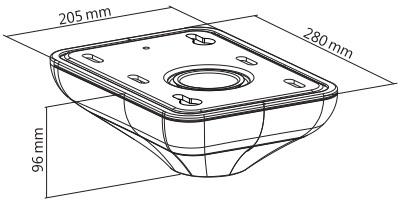

CPS - CEILING PLATE
WITH COVER
Item no.: 3217

INFO

Ceiling mount module

The stable ceiling plate provides a solid foundation for the poles and contains keyhole slots that allow them to be pushed on and screwed in quickly. The cover included in the scope of delivery rounds off the system and creates an elegant finish!

RAIL ADAPTER SINGLE

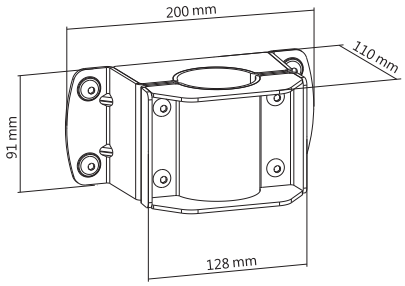

CPS - RAIL ADAPTER FOR POLE-SERIES
Item no.: 3218

RAIL ADAPTER DUAL

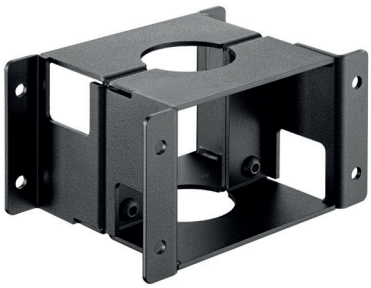

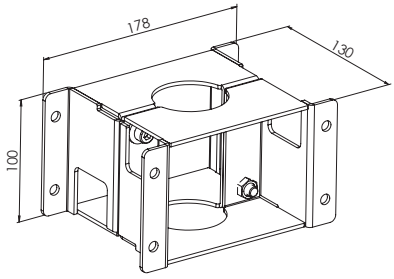

CPS - BACK TO BACK RAIL ADAPTER FOR POLE-SERIES
Item no.: 3226

INFO

Possible installations on the POLE series:

The high-quality adapters for the poles enable the aluminum rails to be mounted on one or both sides. This means that back-to-back installations can also be created very easily in order to create a double-sided advertising-effective digital signage presentation.

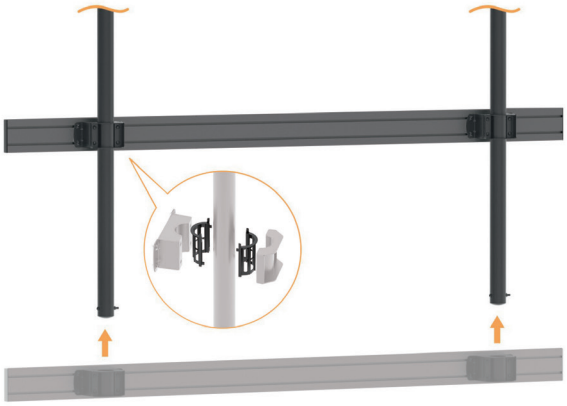

VESA ADAPTER ARMS | MICRO ADJUSTABLE

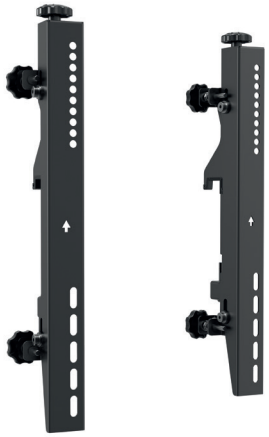

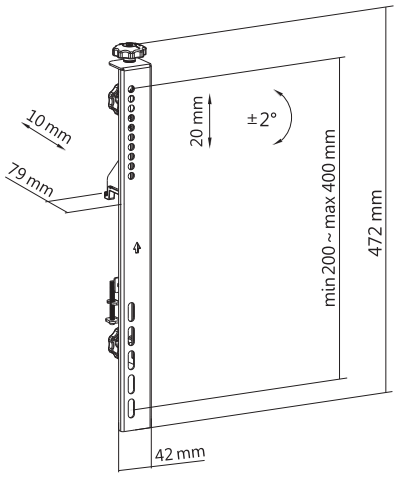

CPS - MICROADJUSTABLE ARMS VESA 400
Item no.: 3201

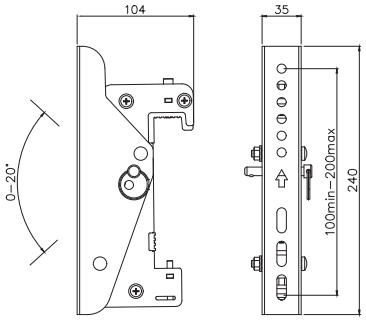

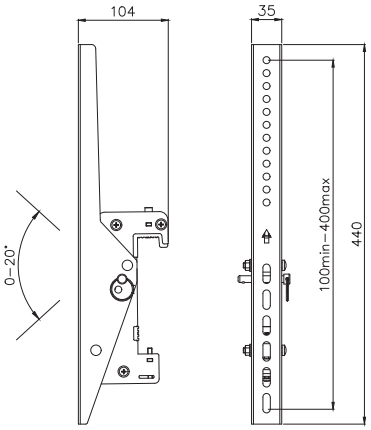

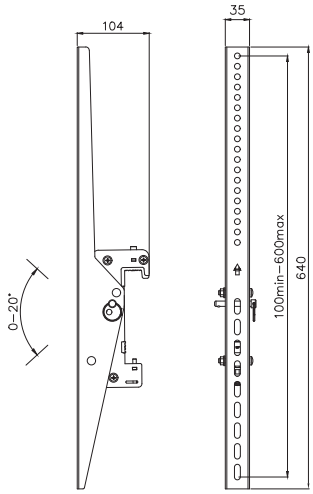

CPS - TILT ARMS VESA 200
Item no.: 3219

CPS - TILT ARMS VESA 400
Item no.: 3220

CPS - TILT ARMS VESA 600
Item no.: 3221

- Optional secure part available | SECURE PART FOR TILT ARMS-SERIES | Item-No.: 3227 (see page 35) -

INFO

Perfect fine adjustment

Each mount offers fine adjustment in height to ensure that the screens are perfectly aligned, resulting in a nearly seamless appearance.

Our tiltable VESA amrs (figure 1) enable comfortable viewing - perfect for menu boards and other display installations that are installed high.

The micro adjustable VESA arms (figure 2) are perfect for video wall or other multiple solutions due to the additional depth adjustment.

figure 1

figure 2

comPROnents® Series

Modular setup - unlimited possibilities

The following scheme gives an overview of the components required for a wall installation.

1 **VESA ADAPTER ARMS**
Choose whether you prefer a fixed, tiltable or fine adjustable solution for the VESA arms.

2 **WALL FIXTURE**

3 **ALUMINIUM RAILS**
Choose between three different lengths according to your individual needs. A connection with each other is guaranteed by the connectors indcluded in the scope of delivery.

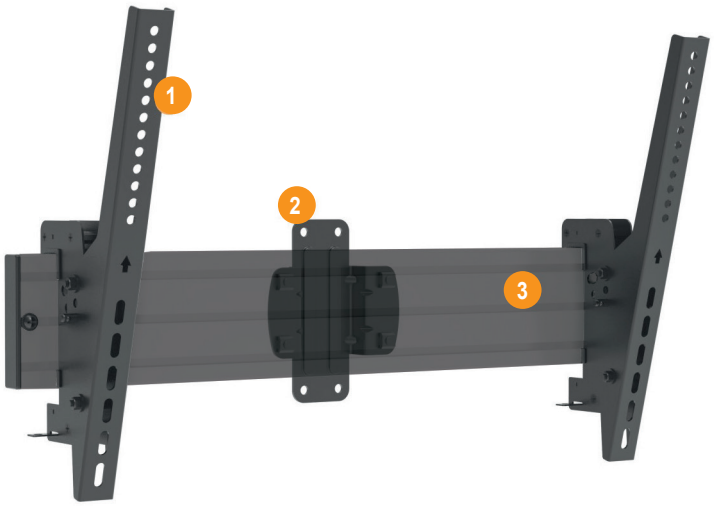

RAILS

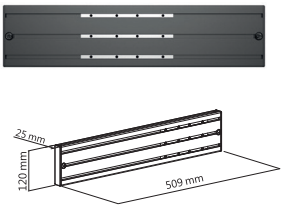

CPS - ALU RAIL 500 mm
Item no.: 3210

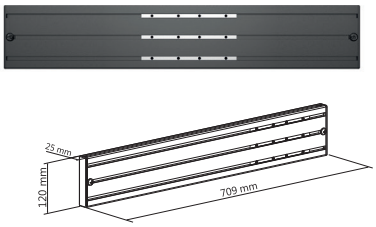

CPS - ALU RAIL 700 mm
Item no.: 3211

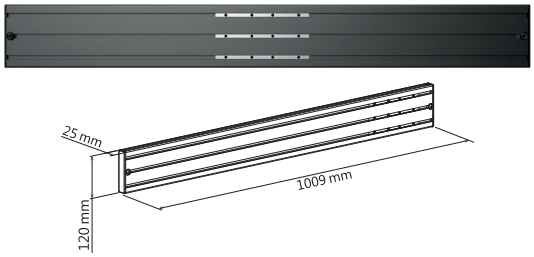

CPS - ALU RAIL 1000 mm
Item no.: 3212

INFO

Connection of the aluminium rails

The connectors for the aluminium rails included in the scope of delivery create endless configurations for almost any environment. The stability among each other remains completely intact and does not affect the load capacity or safety in any way.

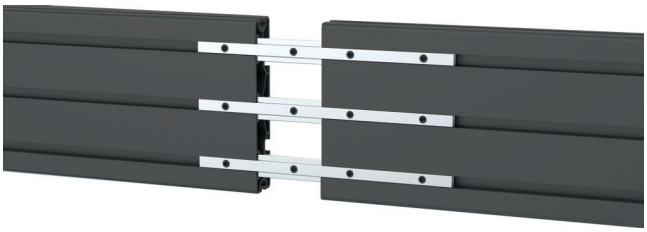

WALL PLATE

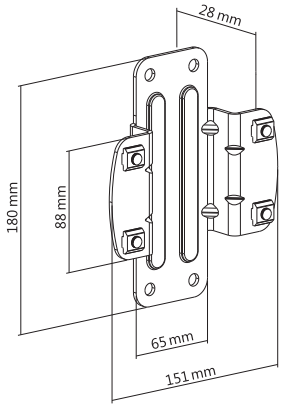

CPS - RAIL ADAPER FOR
WALL MOUNTING
Item no.: 3213

VESA ADAPTER ARMS | MICRO ADJUSTABLE

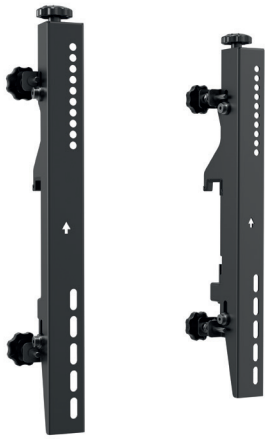

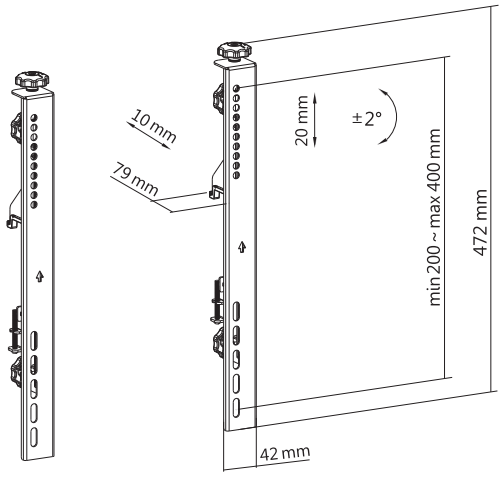

CPS - MICROADJUSTABLE
ARMS VESA 400
Item no.: 3201

VESA ADAPTER ARMS | TILTABLE

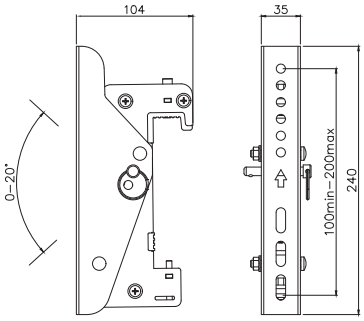

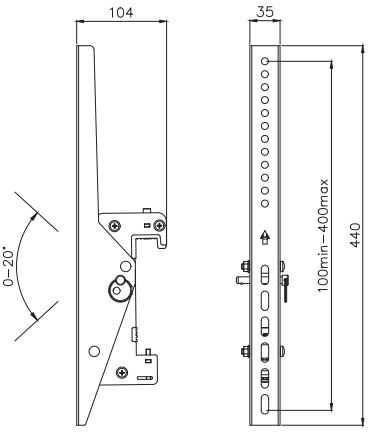

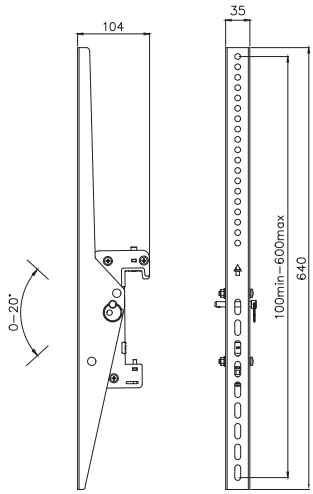

CPS - TILT ARMS VESA 200
Item no.: 3219

CPS - TILT ARMS VESA 400
Item no.: 3220

CPS - TILT ARMS VESA 600
Item no.: 3221

- Optional secure part available | SECURE PART FOR TILT ARMS-SERIES | Item-No.: 3227 (see page 35) -

INFO

Perfect fine adjustment

Each mount offers fine adjustment in height to ensure that the screens are perfectly aligned, resulting in a nearly seamless appearance.

Our tiltable VESA amrs (figure 1) enable comfortable viewing - perfect for menu boards and other display installations that are installed high.

The micro adjustable VESA arms (figure 2) are perfect for video wall or other multiple solutions due to the additional depth adjustment.

figure 1

figure 2

comPROnents® Series

Modular setup - unlimited possibilities

The following scheme gives an overview of the components required for a floor-to-wall mount.

1 **WALL MOUNTING KIT**
Included for extra security.

2 **BASE PLATE**
An ideal choice when space is limited.

VIDEO WALL STAND SYSTEMS

Installation example:
Mobile video wall stand system 3x3 landscape

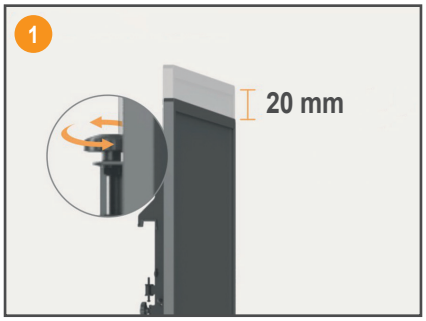

Fine adjustment in height

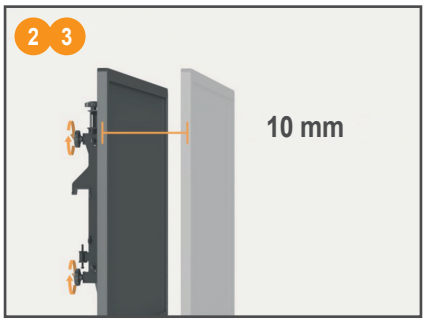

Fine adjustment in depth

Installation example:
Video wall stand system for floor-to-wall mounting 2x2 landscape

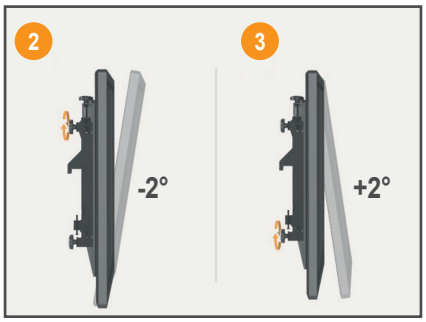

Tilt compensation function

Installation example:
Free standing video wall stand system 3x3 landscape

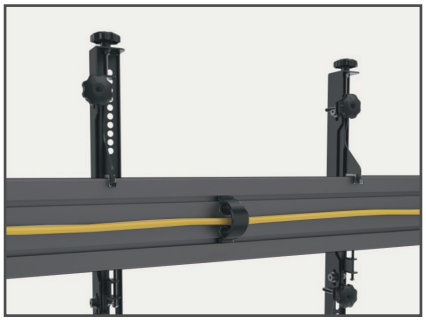

incl. cable management

FLOOR TO WALL ADAPTER

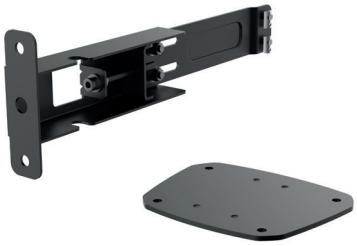

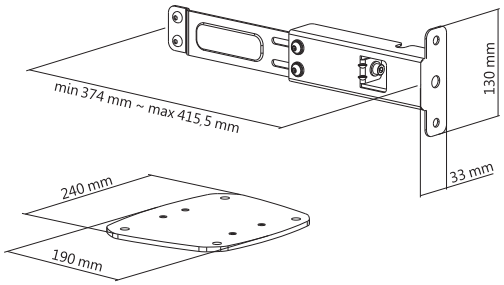

CPS - FLOOR TO WALL ADAPTER (BOLT-DOWN)
Item no.: 3205

INFO

The set for floor to wall mounting enables the aluminium pillars to be attached to an existing wall in a practical and space saving manner in a few simple steps.
Due to the ingenious wall angle, take measure on the floor is also not a problem, as the depth can be adjusted later. Furthermore, we enable perfect access to your cable management.

SINGLE LEVELING FEET

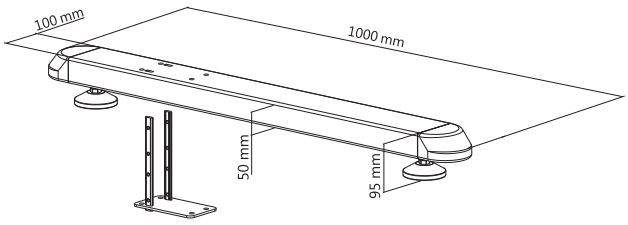

CPS - SINGLE LEVELING FEET
Item no.: 3203

LOCKING CASTERS

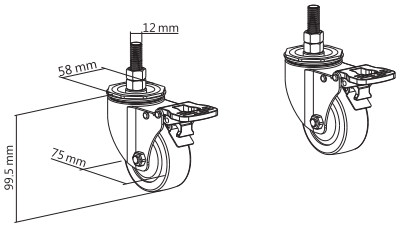

CPS - LOCKING CASTER SET FOR LEVELING FEET-SERIES
Item no.: 3208

ALU PILLAR

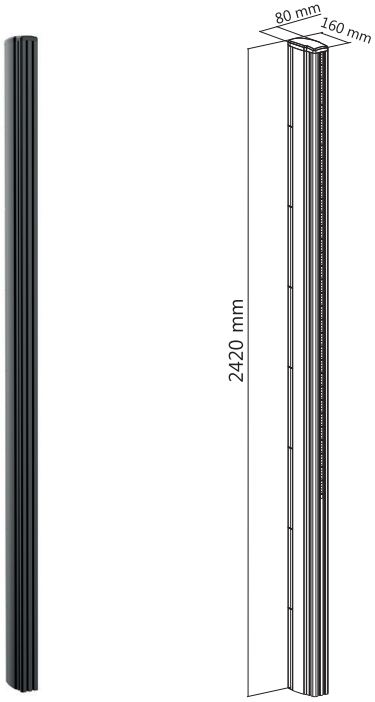

CPS - ALU PILLAR 2400 mm
(CUTTABLE TO DESIRED LENGTH)
Item no.: 3207

INFO

The high-quality aluminium columns impress with their light weight paired with maximum stability. On the back, the cables can be routed almost invisibly in the profile and, if necessary, can be run in different positions. Upon request, the columns are also available in the dimensions you require.

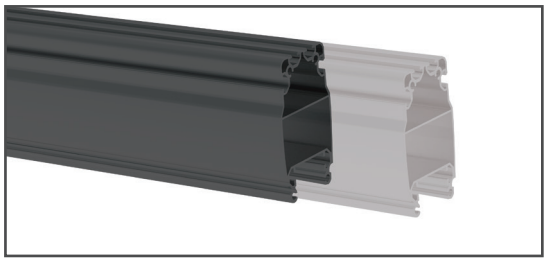

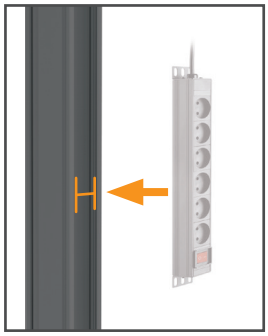

RAIL ADAPTER FOR ALU PILLAR

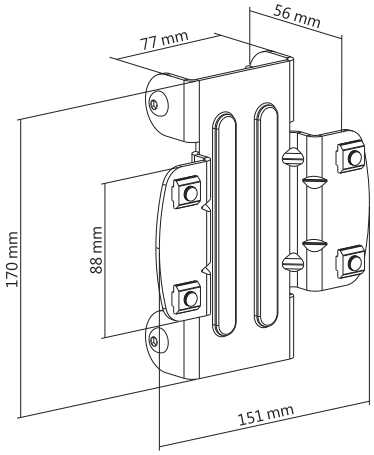

CPS - RAIL ADAPTER
FOR ALU PILLAR
Item no.: 3209

INFO

The high-quality adapters for the aluminium pillars enable the aluminium rails to be installed quickly and easily. Thanks to the ingenious profile, you can place a large number of these adapters on top of each other and thus also enable multiple screens to be installed on top of each other. There are no limits to you.

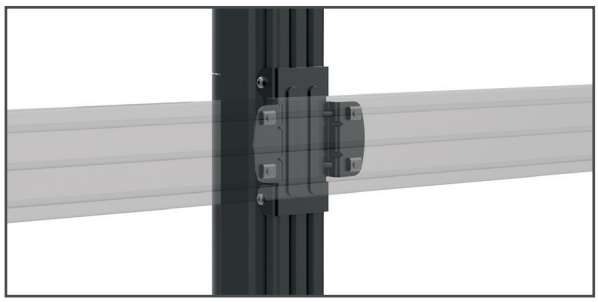

RAILS

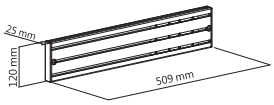

CPS - ALU RAIL 500 mm
Item no.: 3210

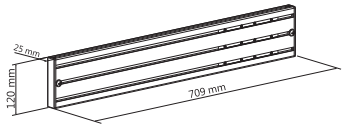

CPS - ALU RAIL 700 mm
Item no.: 3211

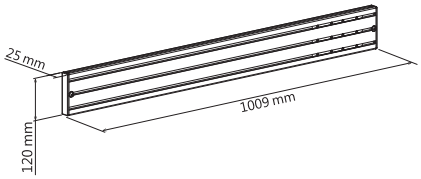

CPS - ALU RAIL 1000 mm
Item no.: 3212

INFO

Connection of the aluminium rails

The connectors for the aluminium rails included in the scope of delivery create endless configurations for almost any environment. The stability among each other remains completely intact and does not affect the load capacity or safety in any way.

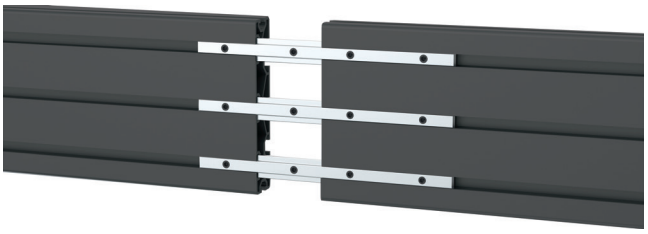

VESA ADAPTER ARMS | MICRO ADJUSTABLE

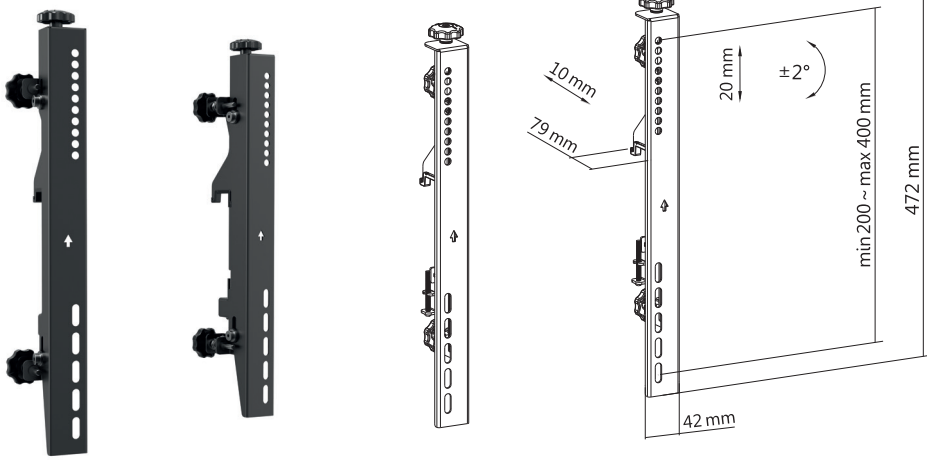

CPS - MICROADJUSTABLE
ARMS VESA 400
Item no.: 3201

VESA ADAPTER ARMS | TILTABLE

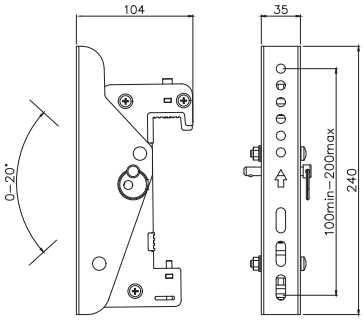

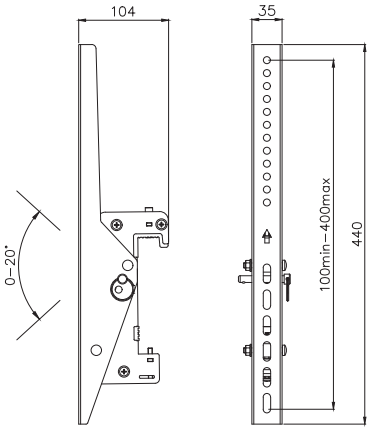

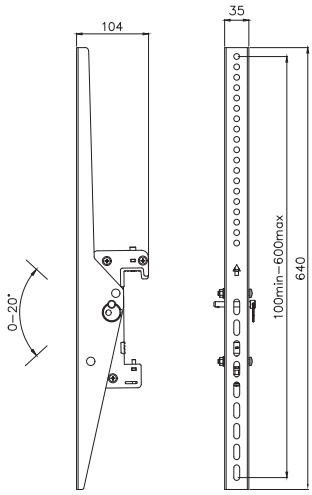

CPS - TILT ARMS VESA 200
Item no.: 3219

CPS - TILT ARMS VESA 400
Item no.: 3220

CPS - TILT ARMS VESA 600
Item no.: 3221

- Optional secure part available | SECURE PART FOR TILT ARMS-SERIES | Item-No.: 3227 (see page 35) -

INFO

Perfect fine adjustment

Each mount offers fine adjustment in height to ensure that the screens are perfectly aligned, resulting in a nearly seamless appearance.

Our tiltable VESA amrs (figure 1) enable comfortable viewing - perfect for menu boards and other display installations that are installed high.

The micro adjustable VESA arms (figure 2) are perfect for video wall or other multiple solutions due to the additional depth adjustment.

figure 1

figure 2

comPROnents® Series

Modular setup - unlimited possibilities

Installation example:
mobile stand system, 2x1 landscape

Installation example:
free standing stand system 2x1 landscape

1 VESA ADAPTER ARMS

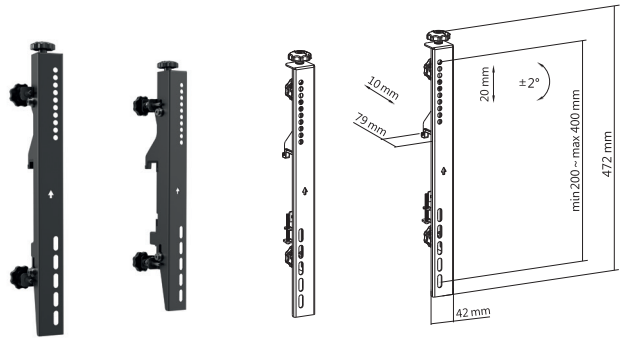

CPS - MICROADJUSTABLE ARMS VESA 400
Item no.: 3201

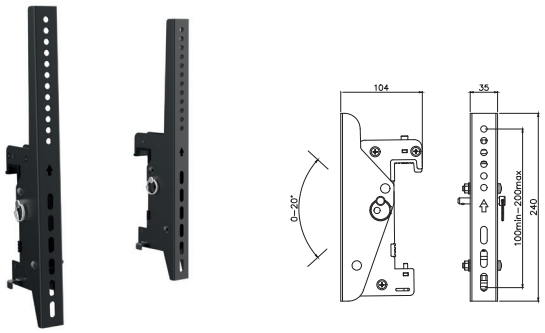

CPS - TILT ARMS VESA 200
Item no.: 3219

2 ALU PILLAR

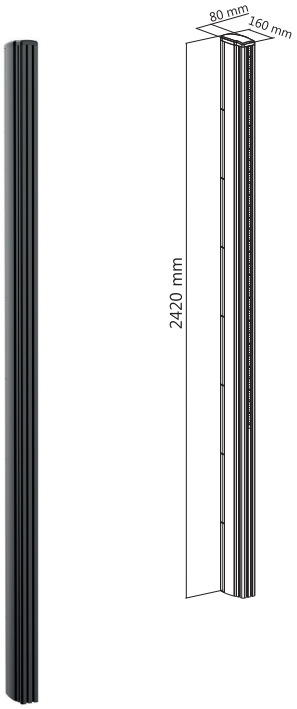

CPS - ALU PILLAR 2400 mm
(CUTTABLE TO DESIRED
LENGTH) | Item no.: 3207

4 SINGLE LEVELING FEET

CPS - SINGLE
LEVELING FEET
Item no.: 3203

FREESTANDING LEVELING FEET

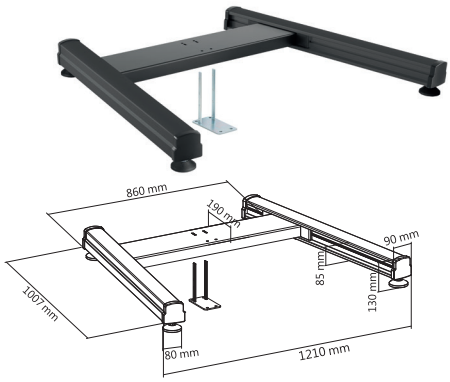

CPS - FREESTANDING
LEVELING FEET
Item no.: 3206

FLOORBASE

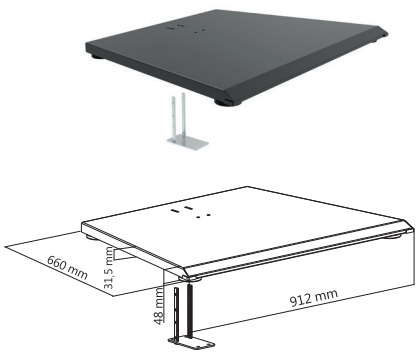

CPS - FLOORBASE
Item no.: 3204

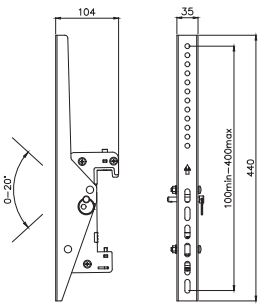

CPS - TILT ARMS VESA 400
Item no.: 3220

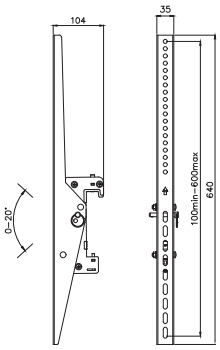

CPS - TILT ARMS VESA 600
Item no.: 3221

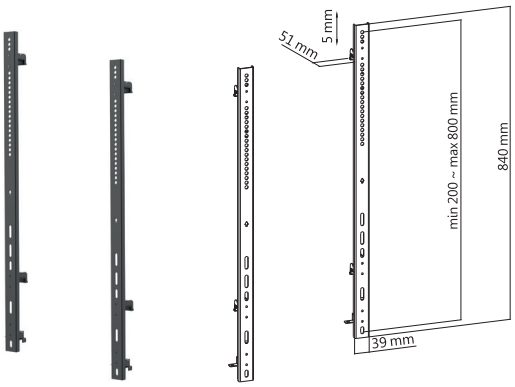

CPS - FIXED ARMS VESA 800 FOR TWO RAILS (Heavy Duty)
Item no.: 3202

3 RAIL ADAPTER FOR ALU PILLAR

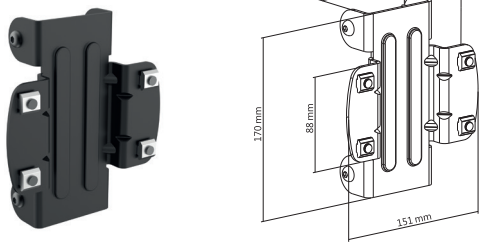

CPS - RAIL ADAPTER FOR ALU PILLAR | Item no.: 3209

5 RAILS

CPS - ALU RAIL 500 mm | Item no.: 3210

LOCKING CASTERS

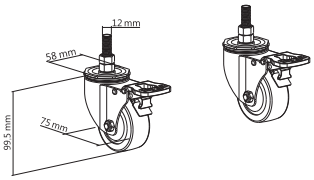

CPS - LOCKING CASTER SET
FOR LVELING FEET-SERIES
Item no.: 3208

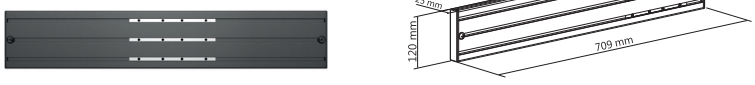

CPS - ALU RAIL 700 mm | Item no.: 3211

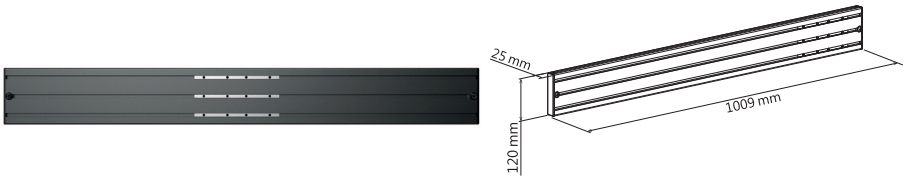

CPS - ALU RAIL 1000 mm | Item no.: 3212

1 **RAIL ADAPTER**
Connects the aluminium rails with the selected tubes. Optional available as a single or back-to-back solution.

2 **VESA ADAPTER ARMS**
Choose whether you prefer a fixe tiltable or fine adjustable solution for the VESA arms.

3 **CEILING- AND FLOOR-FIXTURE**

4 **POLES**
Choose between standard poles or poles with weight compensatic function.

5 **ALUMINIUM RAILS**
Choose between three different lengths according to your individual needs. A connection with each other is guaranteed by the connectors included in the scope of delivery.

POLES

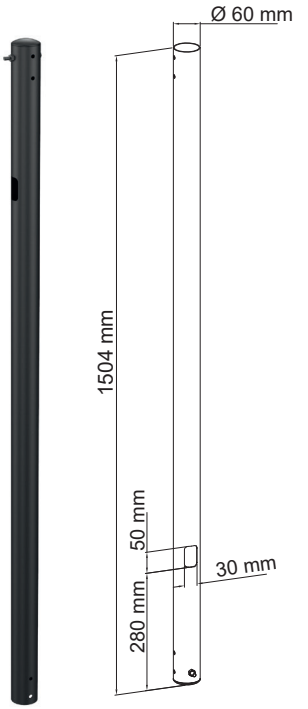

CPS - POLE 1500 mm
Ø 60 mm
Item no.: 3214

POLE CONNECTOR

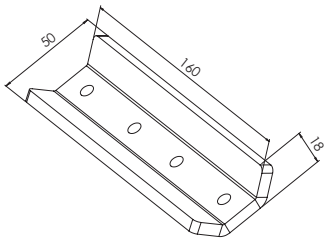

CPS - POLE CONNECTOR
Item no.: 3222

CEILING PLATE

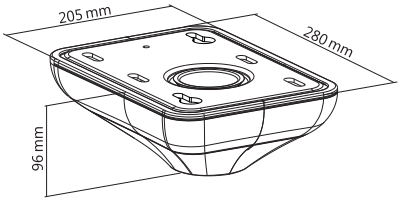

CPS - CEILING PLATE
WITH COVER
Item no.: 3217

INFO

Ceiling mount module

The stable ceiling plate provides a solid foundation for the poles and contains keyhole slots that allow them to be pushed on and screwed in quickly. The cover included in the scope of delivery rounds off the system and creates an elegant finish!

RAIL ADAPTER SINGLE

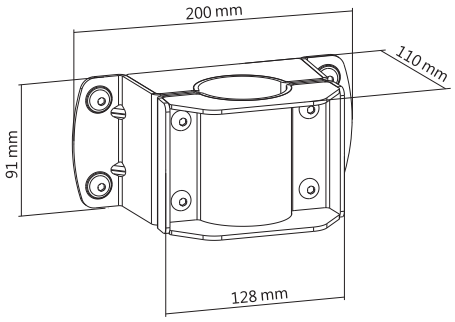

CPS - RAIL ADAPTER FOR
POLE-SERIES
Item no.: 3218

RAIL ADAPTER SINGLE

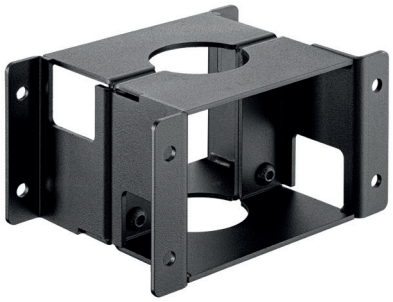

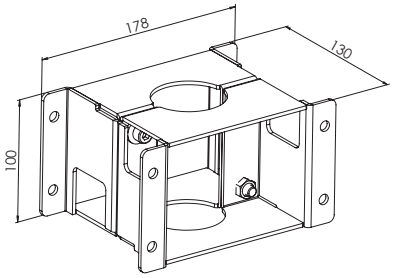

CPS - BACK TO BACK
RAIL ADAPTER FOR
POLE-SERIES
Item no.: 3226

RAILS

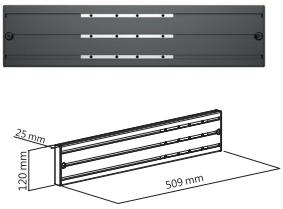

CPS - ALU RAIL 500 mm
Item no.: 3210

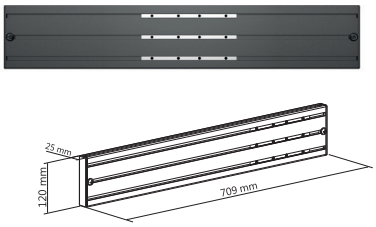

CPS - ALU RAIL 700 mm
Item no.: 3211

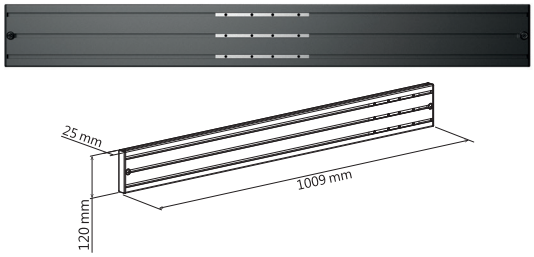

CPS - ALU RAIL 1000 mm
Item no.: 3212

INFO

Connection of the aluminium rails

The connectors for the aluminium rails included in the scope of delivery create endless configurations for almost any environment. The stability among each other remains completely intact and does not affect the load capacity or safety in any way.

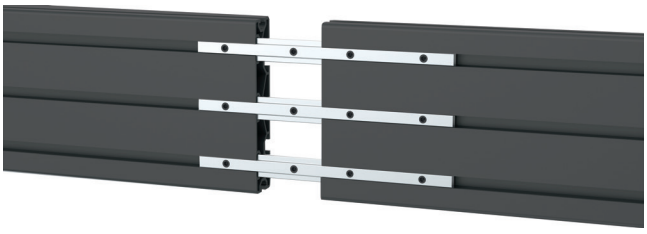

VESA ADAPTER ARMS | MICRO ADJUSTABLE

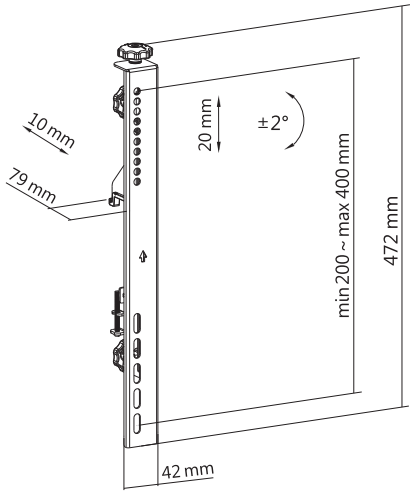

CPS - MICROADJUSTABLE
ARMS VESA 400
Item no.: 3201

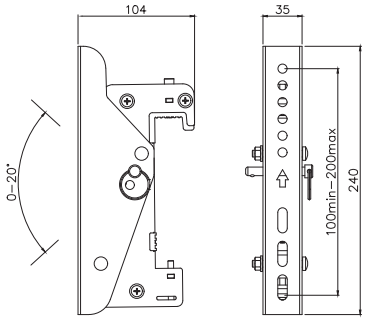

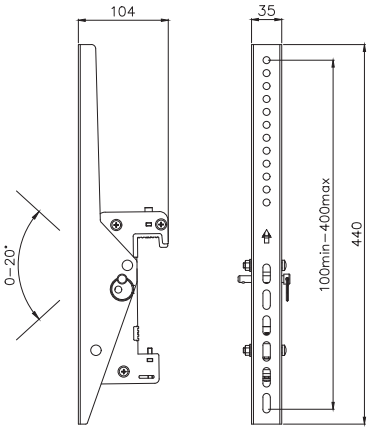

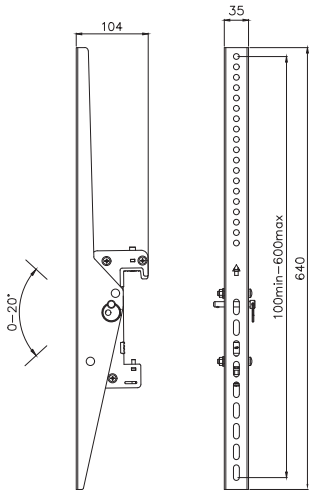

CPS - TILT ARMS VESA 200
Item no.: 3219

CPS - TILT ARMS VESA 400
Item no.: 3220

CPS - TILT ARMS VESA 600
Item no.: 3221

- Optional secure part available | SECURE PART FOR TILT ARMS-SERIES | Item-No.: 3227 (see page 35) -

INFO

Perfect fine adjustment

Each mount offers fine adjustment in height to ensure that the screens are perfectly aligned, resulting in a nearly seamless appearance.

Our tiltable VESA amrs (figure 1) enable comfortable viewing - perfect for menu boards and other display installations that are installed high.

The micro adjustable VESA arms (figure 2) are perfect for video wall or other multiple solutions due to the additional depth adjustment.

figure 1

figure 2

1 WALL ADAPTER
Fastens the aluminium rails in the selected length from the wall into the room. Optionally available as a single or back-to-back solution.

2 VESA ADAPTER ARMS
Choose whether you prefer a fixed, tiltable or finely adjustable solution for the VESA arms.

3 ALUMINIUM RAILS
Choose between three different lengths according to your individual needs. A connection with each other is guaranteed by the connectors indcluded in the scope of delivery.

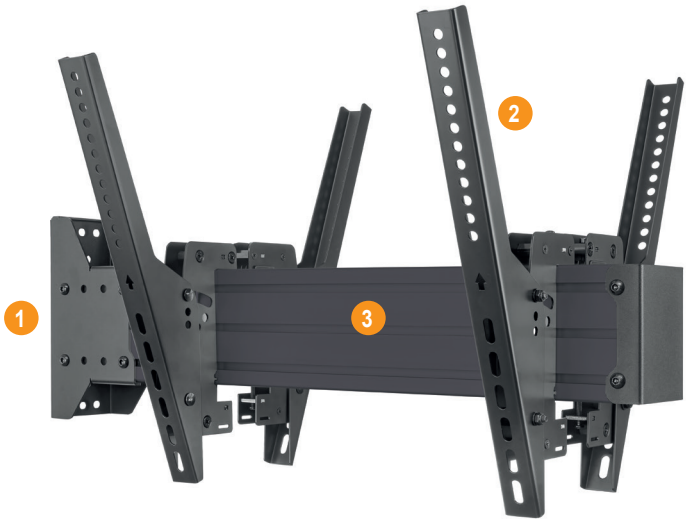

RAIL ADAPTER SINGLE

CPS - SINGLE RAIL ADAPTER FOR
FROM WALL INSTALLATION
Item no.: 3223

RAIL ADAPTER B2B

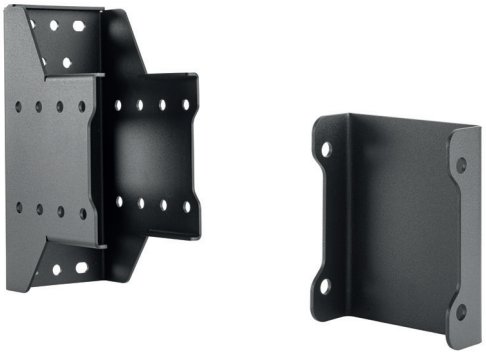

CPS - BACK TO BACK RAIL ADAPTER
FOR FROM WALL INSTALLATION
Item no.: 3225

RAILS

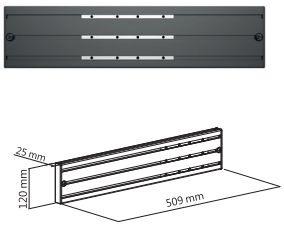

CPS - ALU RAIL 500 mm
Item no.: 3210

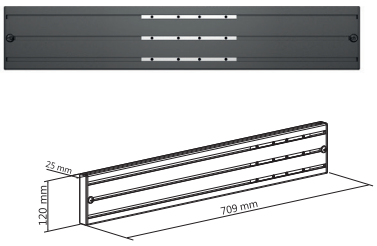

CPS - ALU RAIL 700 mm
Item no.: 3211

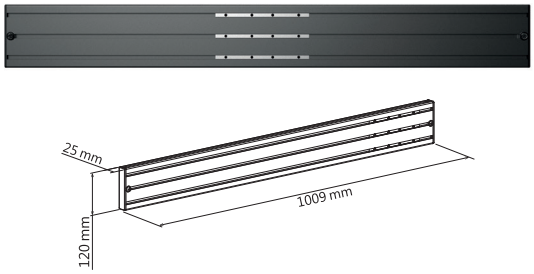

CPS - ALU RAIL 1000 mm
Item no.: 3212

VESA ADAPTER ARMS

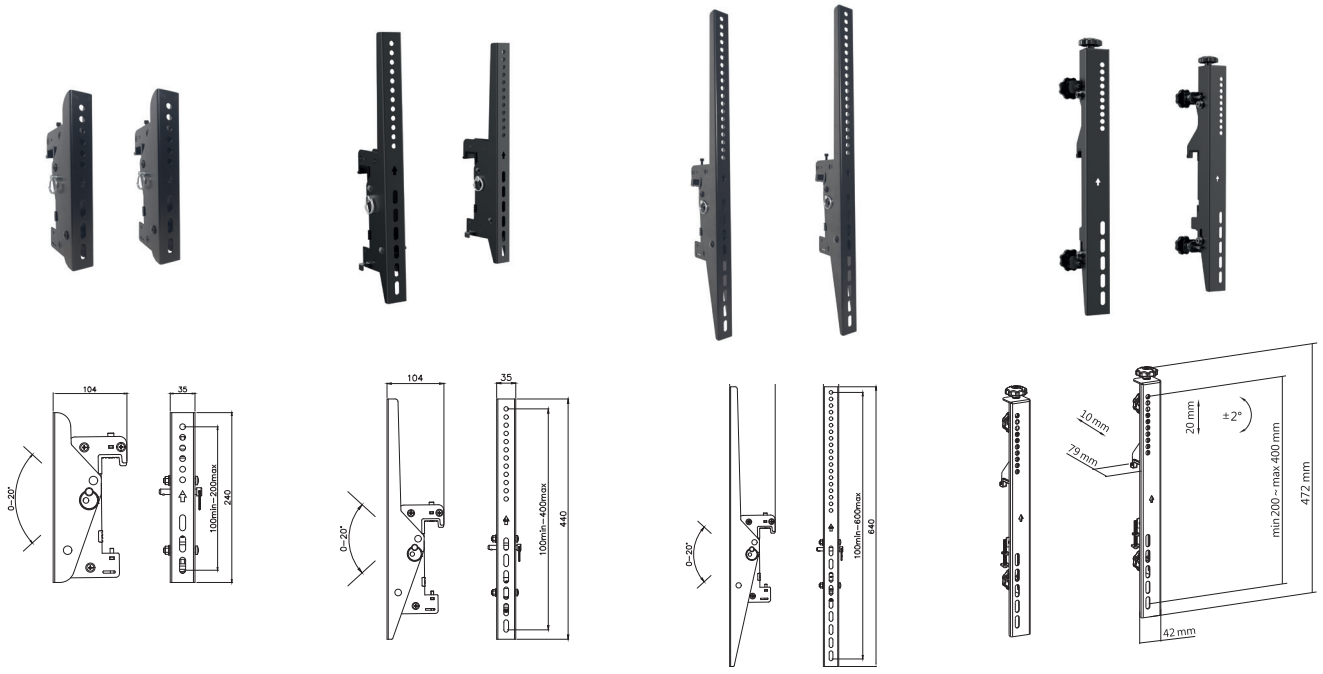

CPS - TILT ARMS VESA 200
Item no.: 3219

CPS - TILT ARMS VESA 400
Item no.: 3220

CPS - TILT ARMS VESA 600
Item no.: 3221

CPS - MICROADJUSTABLE
ARMS VESA 400 | Item no.: 3201

ACCESSORIES

CAMERA HOLDER

CPS - CAMERA HOLDER
Item no.: 3200

LS-1 SOUNDBAR

LS-1 SOUNDBAR
Item no.: 8900

CISCO ROOM-KIT ADAPTER

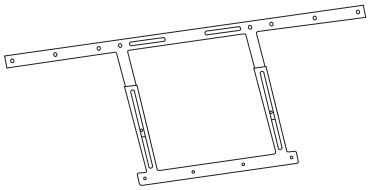

CISCO ROOM-KIT ADAPTER
55 - 75" | Item no.: 1925
75 - 86" | Item no.: 2900

CISCO ROOM-KIT ADAPTER DUAL

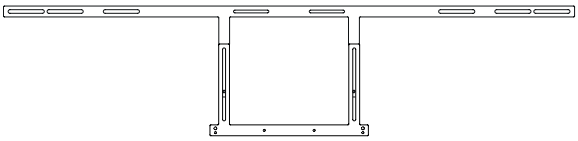

CISCO ROOM-KIT ADAPTER DUAL
55", 65", 75" | Item no.: 2282
75 - 86" | Item no.: 2904

CISCO ROOM-KIT ADAPTER WEBEX BOARD

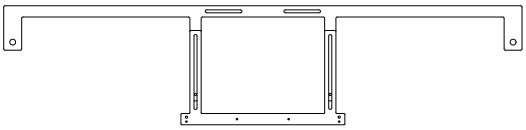

CISCO ROOM-KIT ADAPTER WEBEX BOARD
55" | Item no.: 2901
70" | Item no.: 2902
85" | Item no.: 2903

MEETUP DISPLAY ADAPTER

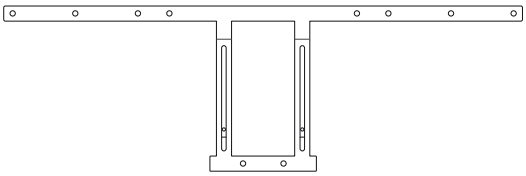

MEETUP DISPLAY ADAPTER
55 - 75" | Item no.: 2278
80 - 86" | Item no.: 2279

POLY DISPLAY ADAPTER

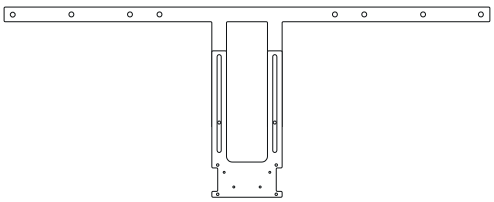

POLY DISPLAY ADAPTER
55 - 75" | Item no.: 2286
75 - 86" | Item no.: 2287

- Tailored to all LED cabinets from all manufacturers
- Fast and uncomplicated assembly thanks to mostly pre-assembled elements
- Short term availability
- Substructures individually adaptable to all on-site situations
  - Wall
  - Free standing
  - Bolt-down
  - Floor-to-wall
  - Mobile
  - Curved
- Including 3D fine adjustment options (H|W|D) on the substructure and on the individual LED cabinet (depending on the manufacturer)
- If required, the system can also be covered with blind frames in a RAL colour of your choice to encase the entire system
- Optionally also with a clever assembly template set for a quick installation

INSTALLATION EXAMPLE BOLT-DOWN

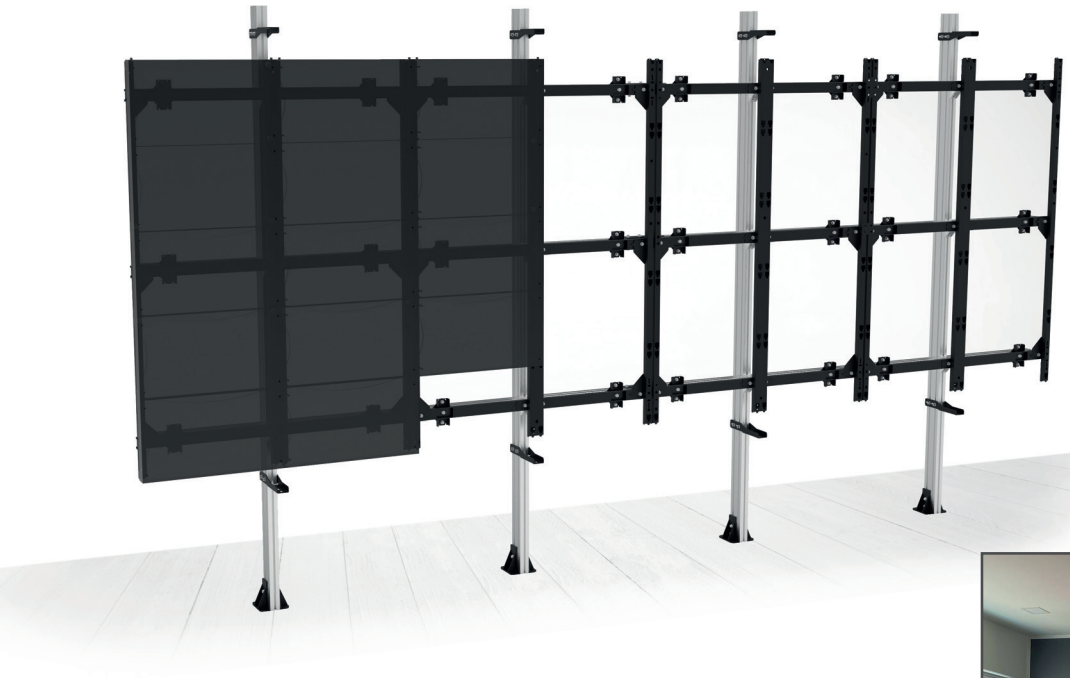

Installation example:
Bolt-down, showroom M-Medien-technik / Samsung The Wall

INSTALLATION EXAMPLE WALL

Installation example: Wall
installation by Dekom AG / Samsung IF series

INSTALLATION EXAMPLE 5x5 wall Samsung IER series

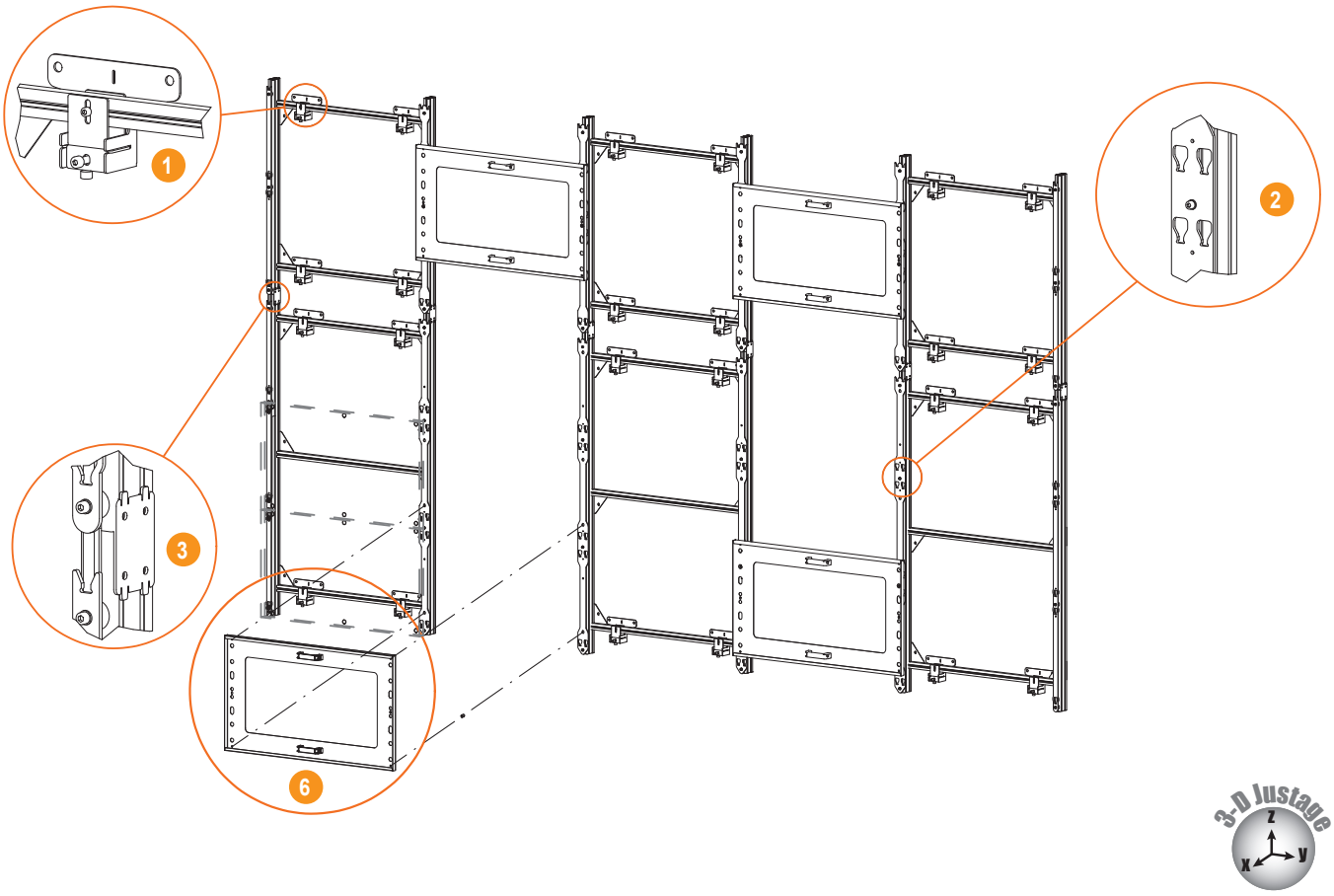

INSTALLATION EXAMPLE 5x4 bolt-down LG LSBA025

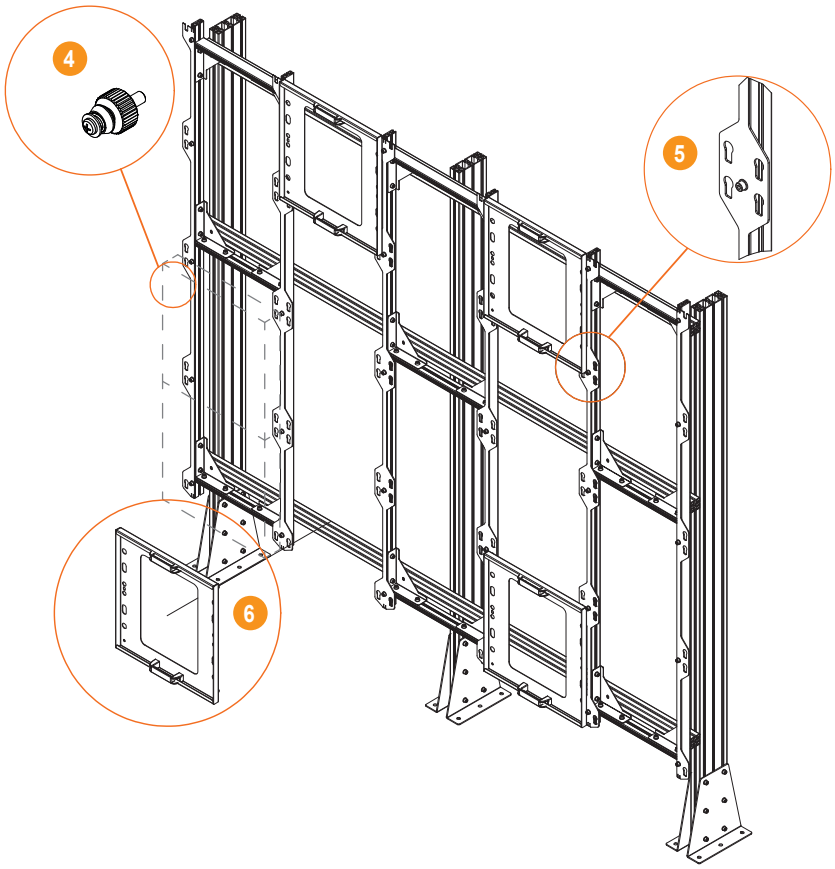

1. fine adjustment of the frame in height, width and depth
2. stable mounting plate including keyhole (material thickness 4 mm)
3. vertical connector for easy plug-in assembly
4. 4x depth adjustment per single cabinet via adjustable suspension bolts (depending on the LED cabinet type)
5. stable mounting plate including keyhole (material thickness 4 mm)
6. Mounting template for quick and easy assembly

CPS - FREESTANDING LEVELING FEET
Item no.: 3206

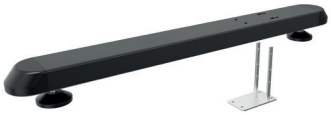

CPS - SINGLE LEVELING FEET
Item no.: 3203

CPS - FLOORBASE
Item no.: 3204

CPS - LOCKING CASTER SET
FOR LEVELING FEET-SERIES
Item no.: 3208

CPS - FLOOR TO WALL ADAPTER (BOLT-DOWN)
Item no.: 3205

CPS - ALU PILLAR 2400 mm
(CUTTABLE TO DESIRED LENGTH)
Item no.: 3207

CPS - RAIL ADAPTER FOR ALU PILLAR
Item no.: 3209

CPS - RAIL ADAPTER FOR WALL MOUNTING
Item no.: 3213

CPS - SINGLE RAIL ADAPTER FOR
FROM WALL INSTALLATON
Item no.: 3223

CPS - BACK TO BACK RAIL ADAPTER
FOR FROM WALL ISTALLATION
Item no.: 3225

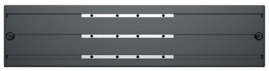

CPS - ALU RAIL 500 mm
Item no.: 3210

CPS - ALU RAIL 700 mm
Item no.: 3211

CPS - ALU RAIL 1000 mm
Item no.: 3212

CPS - TILT ARMS VESA 200
Item no.: 3219

CPS - TILT ARMS VESA 400
Item no.: 3220

CPS - TILT ARMS VESA 600
Item no.: 3221

CPS - SECURE PART FOR TILT ARMS-SERIES
Item no.: 3227

CPS - MICROADJUSTABLE ARMS VESA 400
Item no.: 3201

CPS - FIXED ARMS VESA 800 FOR TWO RAILS (HEAVY DUTY)
Item no.: 3202

Further components on page 36 →

CPS - CAMERA HOLDER
Item no.: 3200

CPS - CEILING PLATE WITH COVER
Item no.: 3217

CPS - POLE 1500 mm Ø 60 mm
Item no.: 3214

CPS - POLE 1750 mm
FOR MULTISCREEN INSTALLATION
Item no.: 3215

CPS - POLE 2250 mm
FOR MULTISCREEN INSTALLATION
Item no.: 3216

CPS - RAIL ADAPTER FOR POLE-SERIES
Item no.: 3218

CPS - BACK TO BACK RAIL ADAPTER
FOR POLE-SERIES
Item no.: 3226

CPS - POLE CONNECTOR
Item no.: 3222

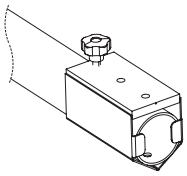

CPS - DRILLING TEMPLATE
Item no.: 3224

www.hagor.de